MONOPHONIC ANALOGUE SYNTHESIZER

monologue

SERVICE MANUAL

TABLE OF CONTENTS

Assembly (Exploded) view: 2
Block Diagram: 3
Schematic Diagram: 4
Harness: 12
Test Mode: 13
Parts List: 16

KORG

Issued: Jan. 13, 2017
Ver. 1.0
©2017 KORG INC.

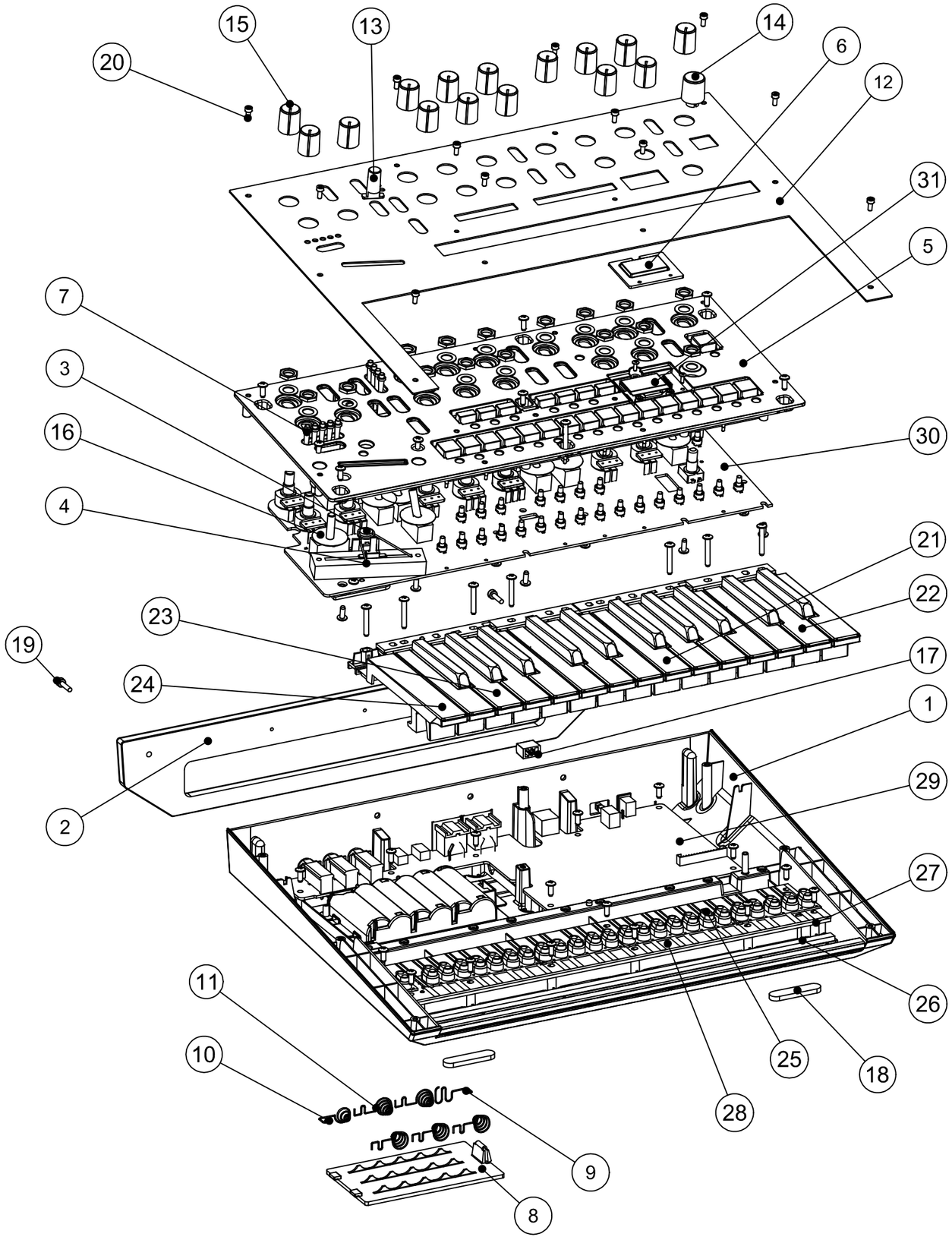

No.	Part No.	Drawing No.	Part Name	QTY
1	510646800192	KOC-E10340	LOWER CASE	1
2	510645800176	KOC-D30535	BACK BOARD	1
3	510646800171	KOC-E30756	BEND BRACKET	1
4	510640805027	KOC-C41846	BEND SPRING	1
5	510646800193	KOC-E20459	MOLD CHASSIS	1
6	510646800175	KOC-E30768	WINDOW	1
7	510646800176	KOC-E40933	LED REFRECTOR	2
8	510646502426	KOC-E30288-5	BATTERY COVER	1
9	510640805031	KOC-C41921	BATTERY SPRING(+)	1
10	510640805032	KOC-C41922	BATTERY SPRING(-)	1
11	510640800203	KOC-C41729	BATTERY SPRING(W)	5
12	510640800510	KOC-C10295	UPPER PANEL	1
13	510646800177	KOC-E30749	BEND KNOB	1
14	510646800179	KOC-E30731	TEMPO KNOB	1
15	510646800180	KOC-E30730	VOL KNOB	15
16	510500501515	KOC-F41307	SWITCH MASK	11
17	510646502163	KOC-E40774	PSW KNOB	1
18	510802500558	KOC-F41516	FLAME LEGS	2
19	510700503541	KOC-C41316	X-3230 CAP SCREW	2
20	510700503713	KOC-C41928	SCREW BT CAP NIC 2.6X6	12
21	510646502364	KOC-H30424-1	LMK SYNTH 12KEY ASSY	1
22	510646502468	KOC-H30424-4	LMK SYNTH 5KEY ASSY	1
23	510646502469	KOC-H30424-5	LMK SYNTH 7KEY ASSY	1
24	510646502469	KOC-H30422-6	LMK SYNTH CC KEY	1
25	510500507108	KOC-E30630-2	LMK RUBBER BUTTON 12	3
26	510500505576	KOC-F42150	LMK-25 KB FELT	1
27	510500505577	KOC-F42151	LMK-25 UPPER LIMIT FELT	1
28		KLM-3619	LMK 25(E-E) PCB Ass'y	1
29		KLM-3621	MAIN PCB Ass'y	1
30		KLM-3622	PANEL PCB Ass'y	1
31		KLM-3623	OLED PCB Ass'y	1

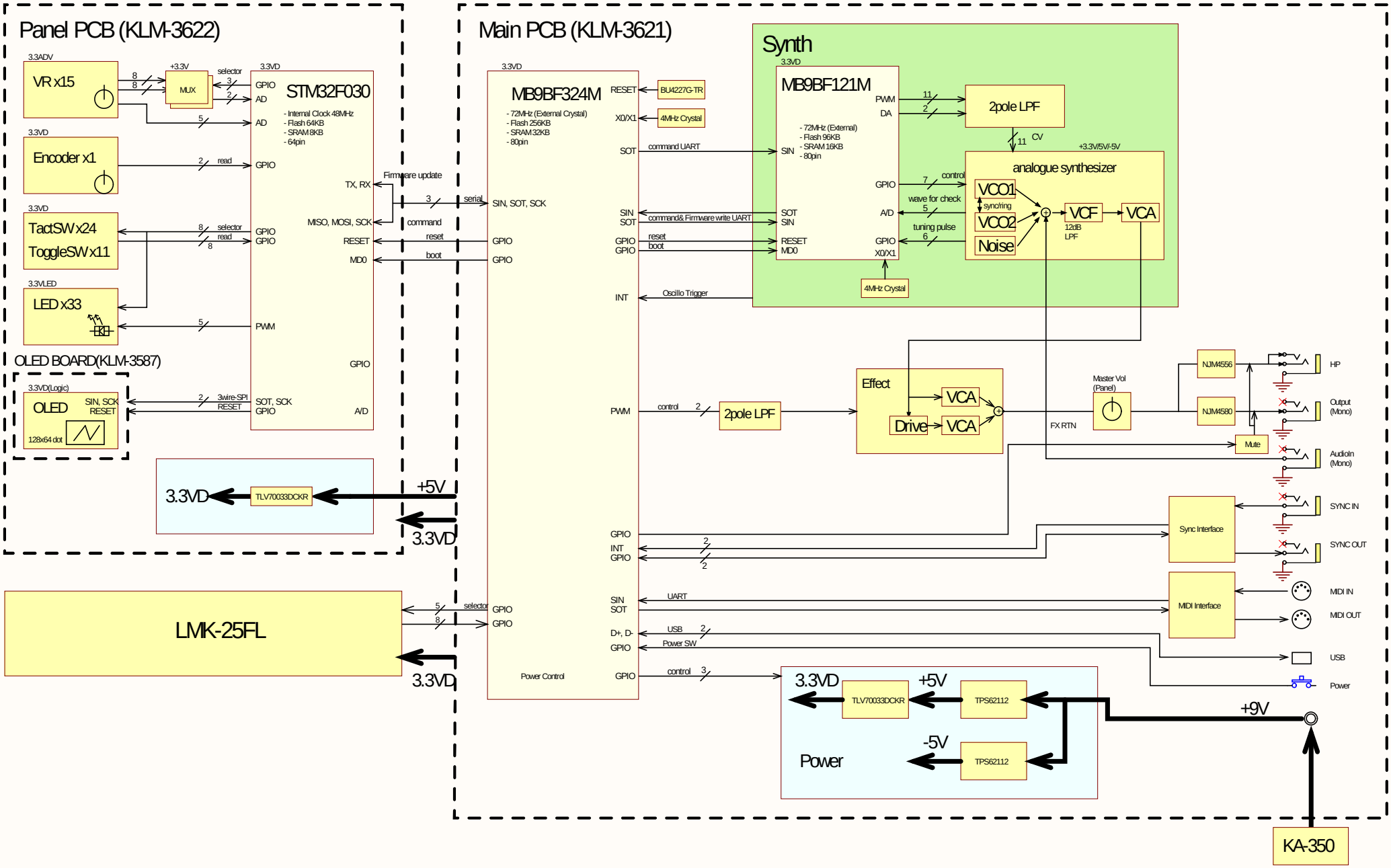

REMARK	REVISAL REASON	DATE	REVISED BY

DRAWN BY	DESIGNED BY	CHECKED BY	CHECKED BY	MODEL X-15230
				TITLE monologue Block Diagram
KORG	DRAWING No. KOD-B40455	*	DATE	

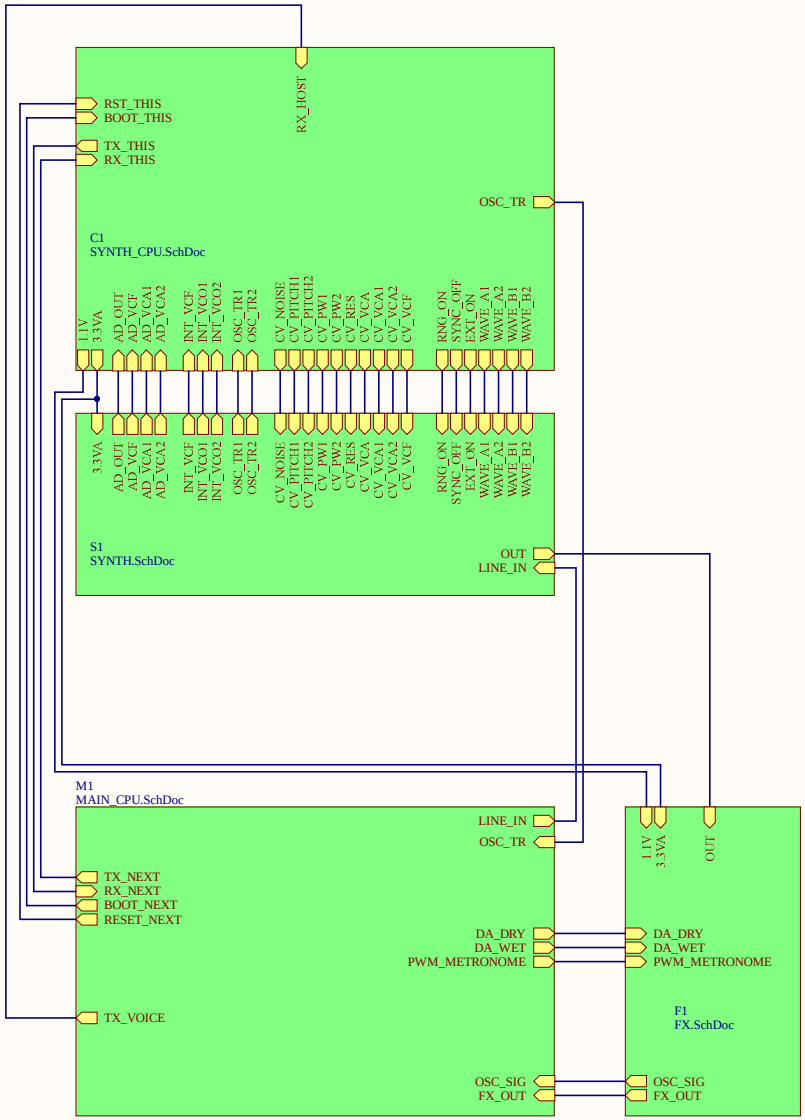

REMARK	REVISAL REASON	DATE	REVISED BY
△			
△			
△			
△			
△			

DRAWN BY	DESIGNED BY	CHECKED BY	CHECKED BY	MODEL X-15230
				TITLE KLM-3621 BOARD MAP 1/5
KORG	DRAWING No. KOD-A31245	*	DATE	

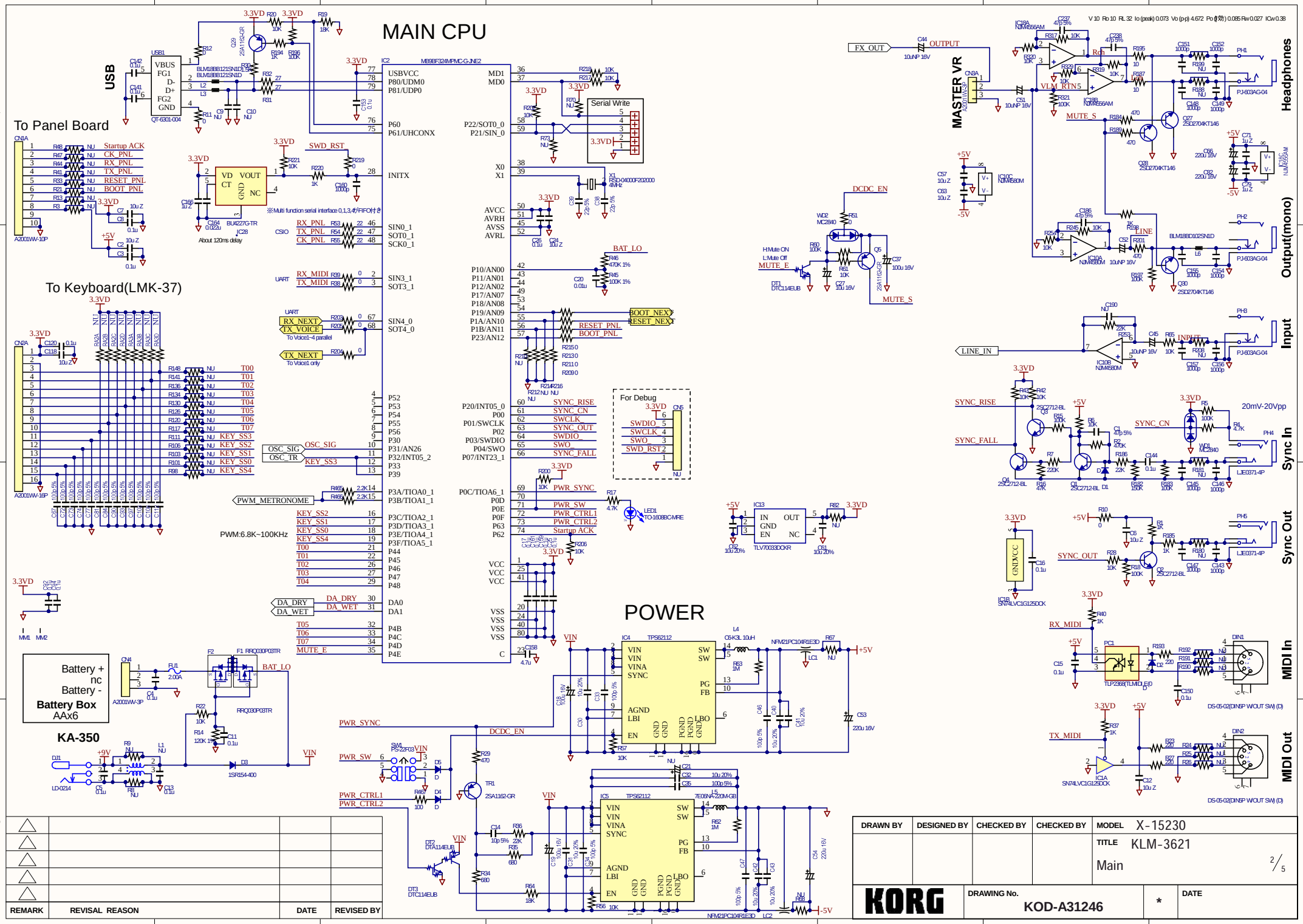
MAIN CPU
USB
To Panel Board
To Keyboard(LMK-37)
Serial Write
For Debug
POWER
Battery +
nc
Battery -
Battery Box
AAx6
KA-350
PWM:6.8K~100KHz
MASTER VR
Headphones
Output(mono)
Input
Sync In
Sync Out
MIDI In
MIDI Out
DRAWN BY
DESIGNED BY
CHECKED BY
CHECKED BY
MODEL X-15230
TITLE KLM-3621
Main
2/5
KORG
DRAWING No.
KOD-A31246
DATE
REMARK
REVISAL REASON
DATE
REVISED BY

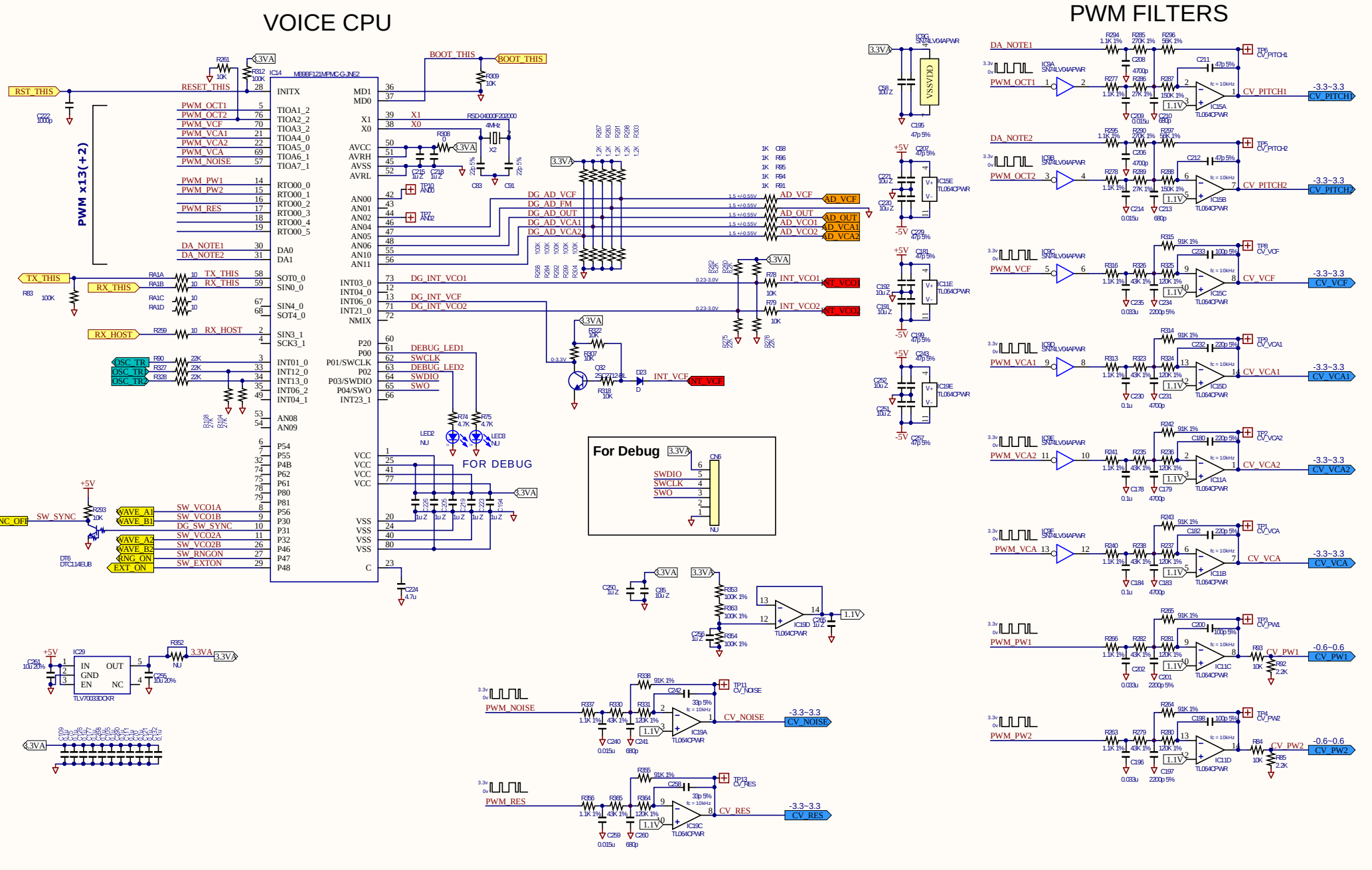

1	CROSS MOD, AD level fix	2015.9.14	Tatsuya Takahashi
REMARK	REVISAL REASON	DATE	REVISED BY

DRAWN BY	DESIGNED BY	CHECKED BY	CHECKED BY	MODEL X-15230
				TITLE KLM-3621 SYNTH CPU 3/5
KORG	DRAWING No. KOD-A31247	*	DATE	

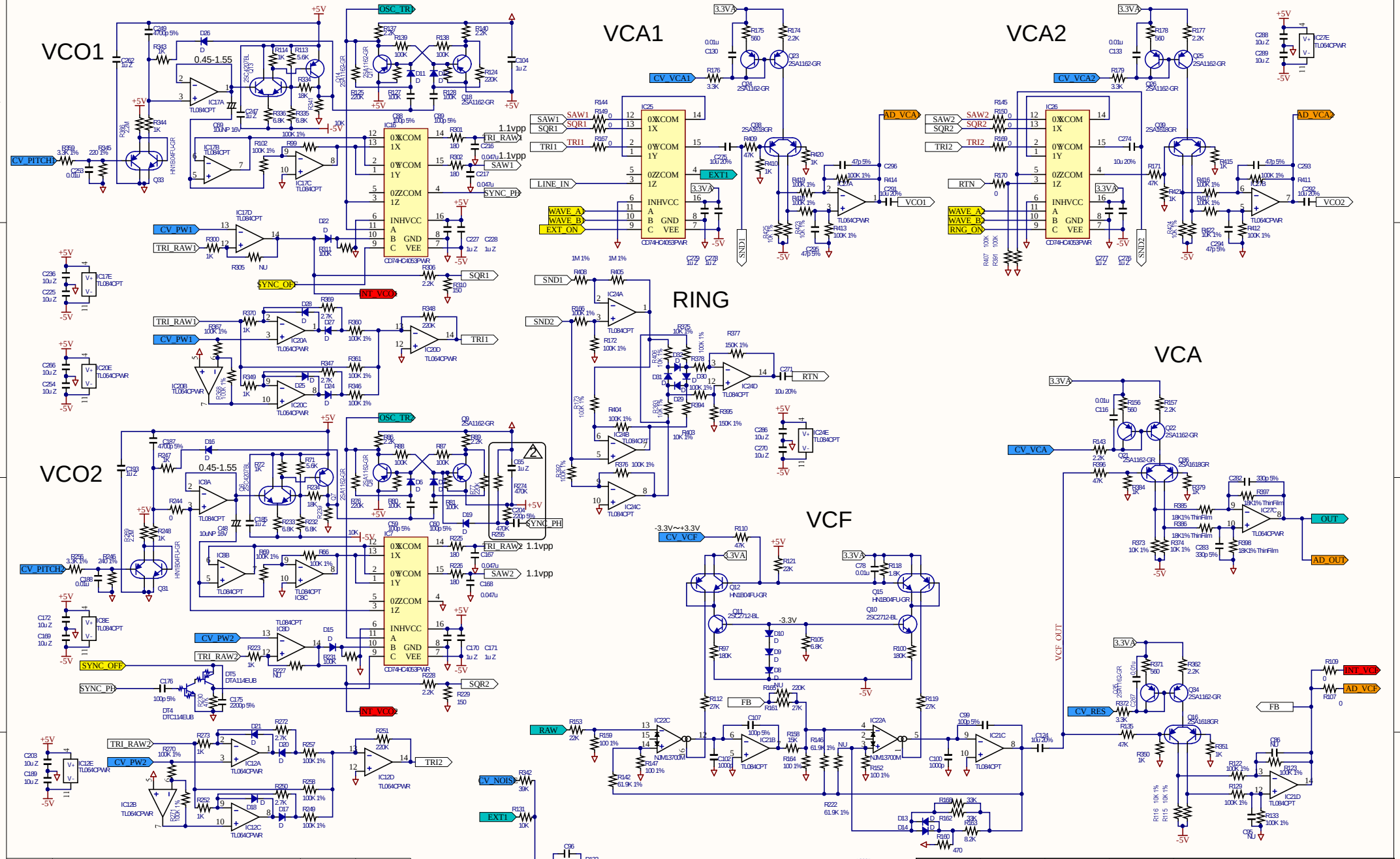

REMARK	REVISAL REASON	DATE	REVISED BY

DRAWN BY	DESIGNED BY	CHECKED BY	CHECKED BY	MODEL X-15230
				TITLE KLM-3621 SYNTH 4/5
KORG	DRAWING No. KOD-A31248	*	DATE	

PWM FILTERS

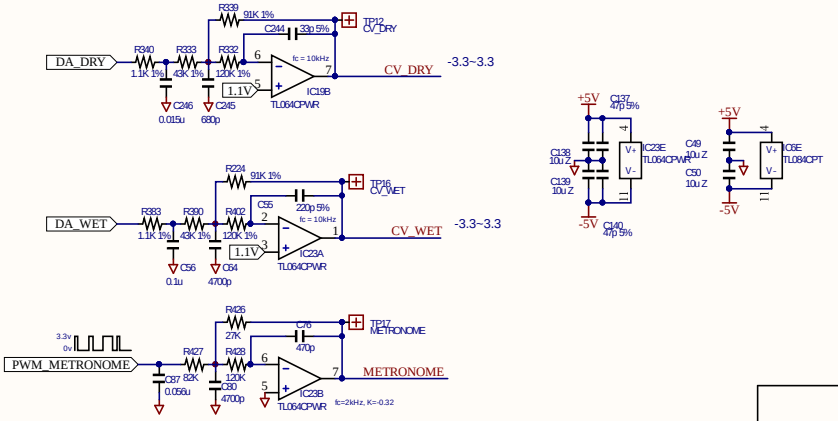

VCA(DRY)

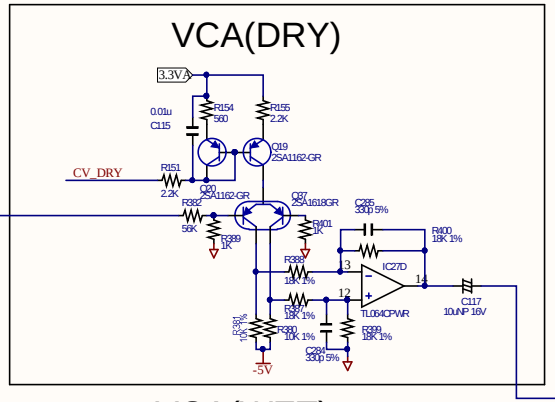

DRIVE

low boost

VCA(WET)

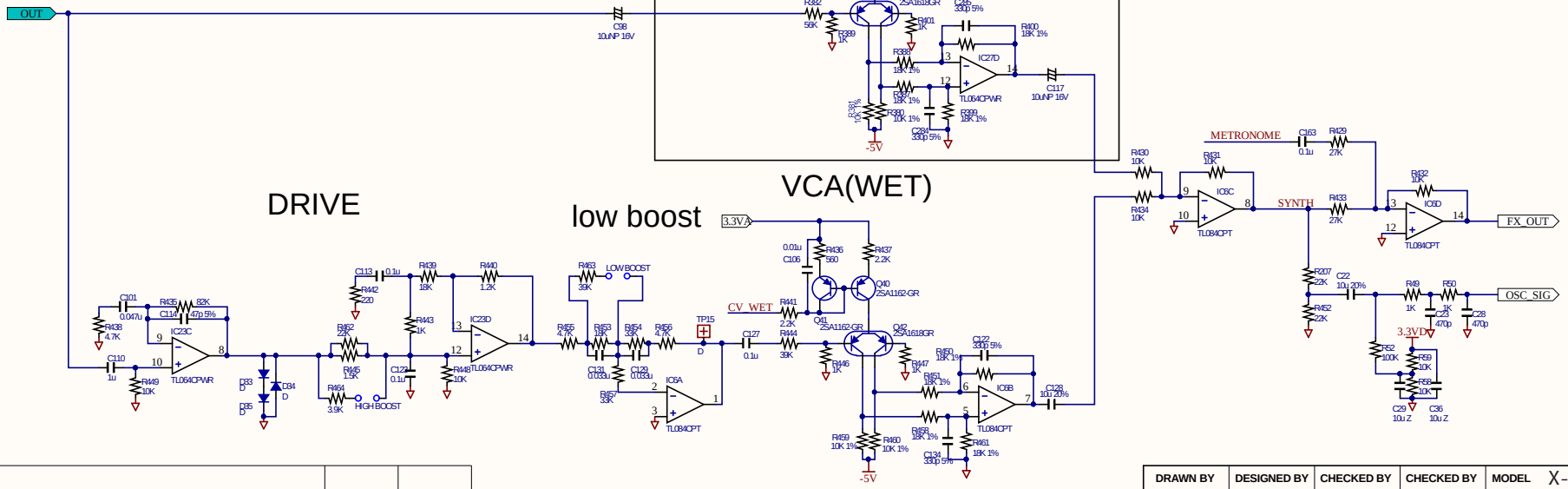

1	CROSS MOD, AD level fix	2015.9.14	Tatsuya Takahashi
REMARK	REVISAL REASON	DATE	REVISED BY

DRAWN BY	DESIGNED BY	CHECKED BY	CHECKED BY	MODEL X-15230
				TITLE KLM-3621 FX 3/5
KORG	DRAWING No. KOD-A31249	*	DATE	

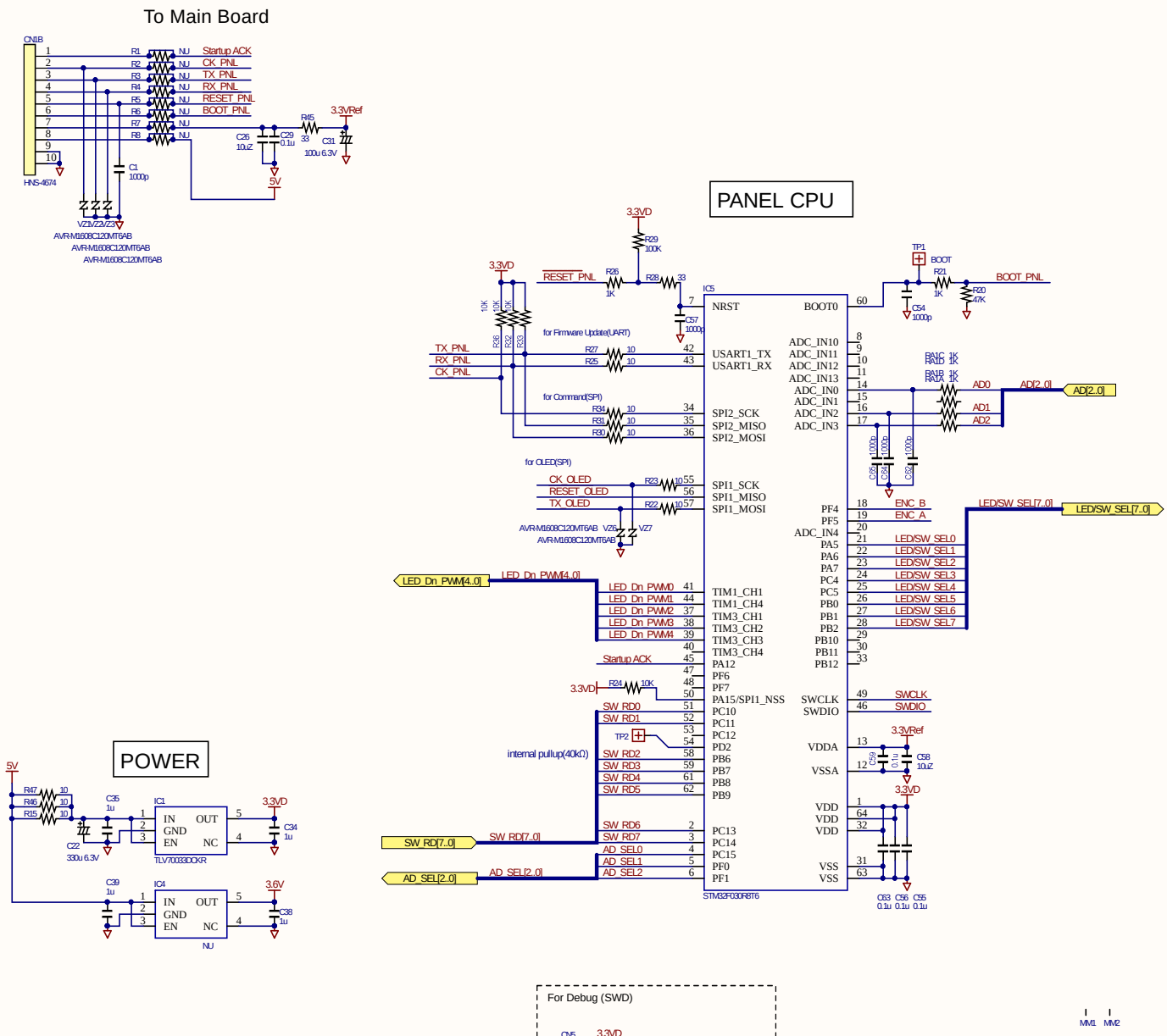

REMARK	REVISAL REASON	DATE	REVISED BY

DRAWN BY	DESIGNED BY	CHECKED BY	CHECKED BY	MODEL
				TITLE KLM-3622/23 CPU, OLED 1/3
KORG	DRAWING No. KOD-A31250	*	DATE	

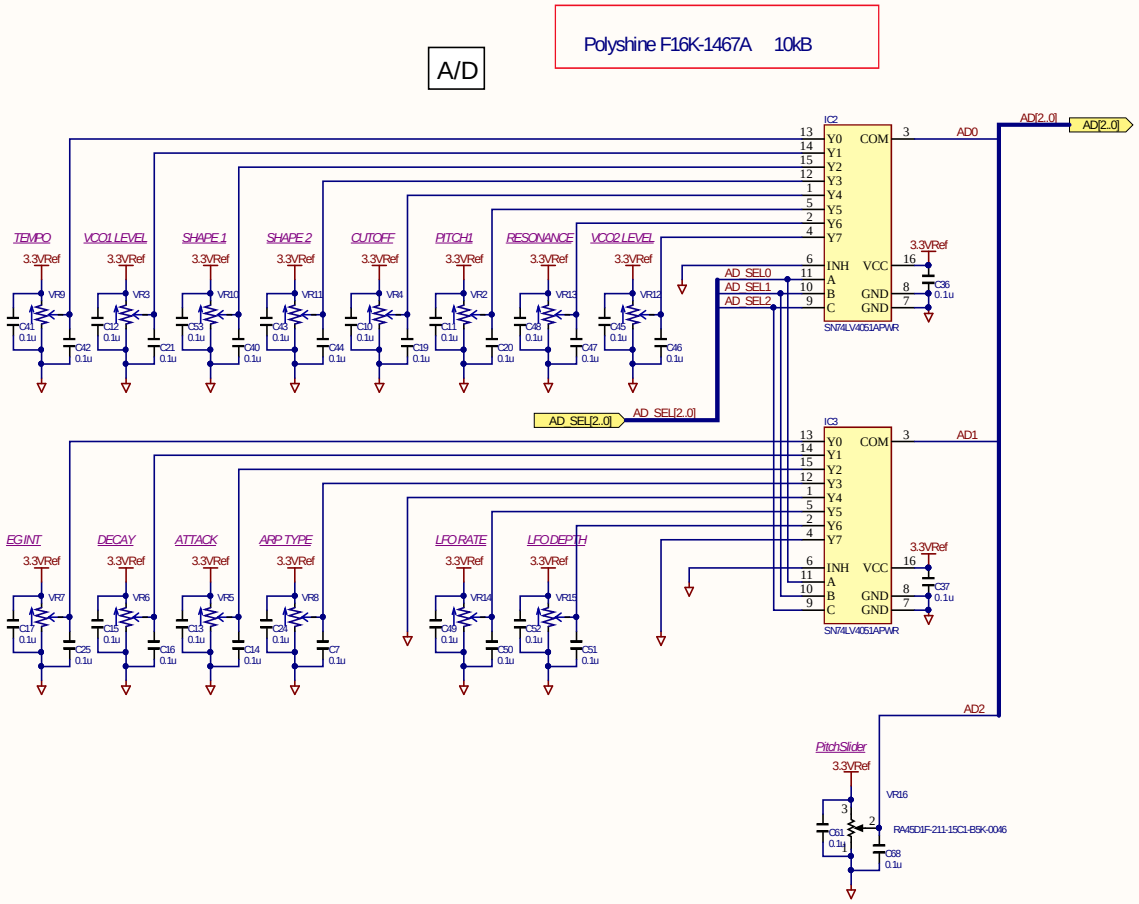

REMARK	REVISAL REASON	DATE	REVISED BY
△			
△			
△			
△			
△			

DRAWN BY	DESIGNED BY	CHECKED BY	CHECKED BY	MODEL
				TITLE KLM-3622/23 AD 2/3
KORG	DRAWING No. KOD-A31251	*	DATE	

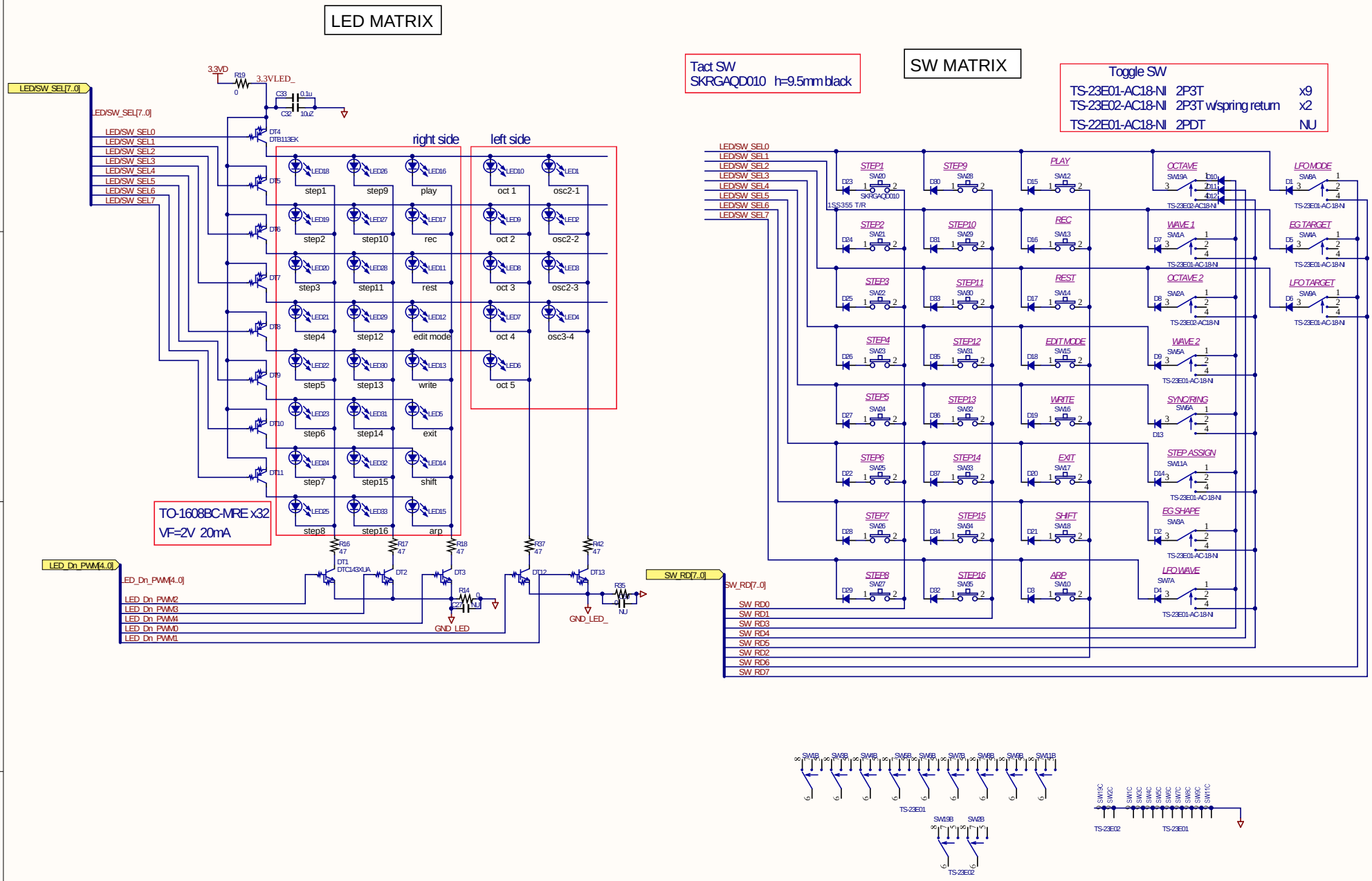

REMARK	REVISAL REASON	DATE	REVISED BY

DRAWN BY	DESIGNED BY	CHECKED BY	CHECKED BY	MODEL
				TITLE KLM-3622/23 LED, SW 1/3
KORG	DRAWING No. KOD-A31252	*	DATE	

HNS-4673
(MAIN-KEYBOARD)

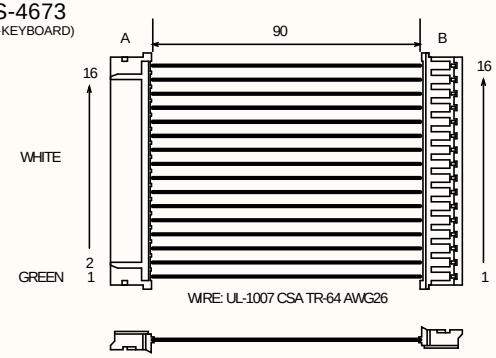

HOUSING: JSY A2001H-16P
TERMINAL: JSY A2001T

HOUSING: JSY A2001H-16P
TERMINAL: JSY A2001T

HNS-4674
(MAIN-PANEL)

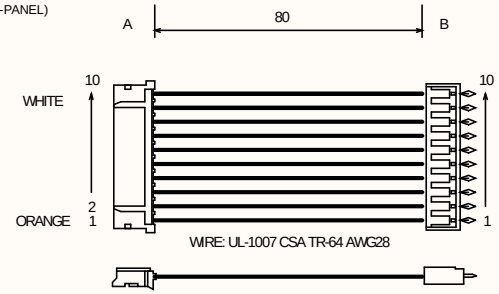

HOUSING: JSY A2001H-10P
TERMINAL: JSY A2001T

HOUSING: JSY B2011HV-10P
TERMINAL: JSY B2011HV-TB

HNS-4675
(MAIN-VOLUME)

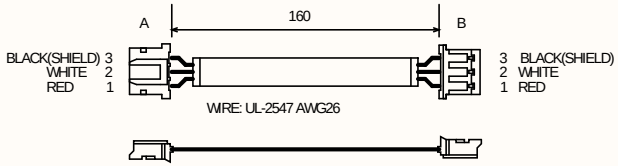

HOUSING: JSY A2001H-3P
TERMINAL: JSY A2001T

HOUSING: JSY A2001H-3P
TERMINAL: JSY A2001T

HNS-4676
(MAIN-BATTERY)

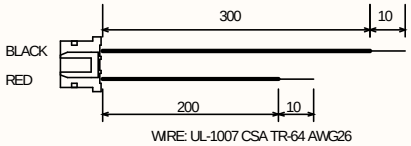

HOUSING: JSY A2001H-3P
TERMINAL: JSY A2001T

HNS-4677

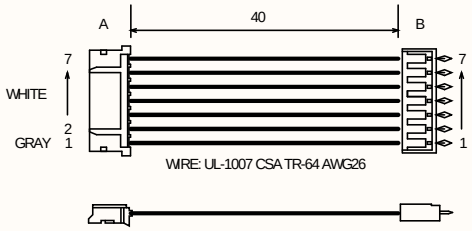

HOUSING: JSY A2001H-7P
TERMINAL: JSY A2001T

HOUSING: JSY B2011HV-7P
TERMINAL: JSY B2011HV-TB

REMARK	REVISAL REASON	DATE	REVISED BY
△			
△			
△			
△			
△			

DRAWN BY	DESIGNED BY	CHECKED BY	CHECKED BY	MODEL X-15230
				TITLE HARNESS DRAWING
KORG	DRAWING No. KOD-O40615			DATE

How to check the operation of monologue

2016/11/29

KORG, Inc

1. Please turn on the power of monologue, and the logo of monologue will appear in display module. 13 or 14 seconds after turning on the power, the logo will disappear.

   If display is not working, please check the connection of harness (HNS-4677 and HNS-4676). Otherwise the module of OLED may be broken.

   If the logo of monologue does not disappear in 15 seconds, it means analogue circuit have a problem and cannot finish tuning operation. You have to repair KLM-3621 PCB.(→please check page.2)

2. Please check the sound using speaker or headphone. You can change the volume by "MASTER" knob.

   If you cannot hear the sound at all, please check the connection of main volume harness (HNS-4675). Otherwise Keyboards may have trouble. If you cannot confirm midi message from USB-MIDI or MIDI OUT Port, please check the connection of keyboard harness (HNS-4673)

3. Please check the reaction of all knobs and switches. By choosing **'Global 5->Parameter Disp All'** in EDIT MODE, you can see all the reaction of operation in display module.

   If there is nonreactive knob or switch, you have to check KLM-3622 PCB.

4. Please check the operation of SYNC IN/OUT, MIDI and USB. These are common function just like other synthesizers.

5. You can initialize all setting and preset sounds as factory setting. Please turn on the power while pressing WRITE and EXIT switches. Owner Manual have details description about this function.

How to find fault location of synthesizer circuit in KLM-3621 PCB

Monologue have test mode for checking all functions. By using test mode, you can get hints where to repair in big minilogue synthesizer circuit. Please use it as a reference.

1. Turning on the power of monologue while pressing **EXIT** and **STEP 3** switches. Monologue will start in service mode.

2. Please hold **EDIT MODE** and **EXIT** for skipping the process of all check. And press EXIT twice for selecting “I-05: -TUNE-”.

3. Please press **STEP 16** switch while being displayed “I-05: -TUNE-”. If there is something wrong in synthesizer circuit, error message will be displayed. Please check attached error code reference for repairing KLM-3621.

monologue - Tuning Error Code Mount Check Guide

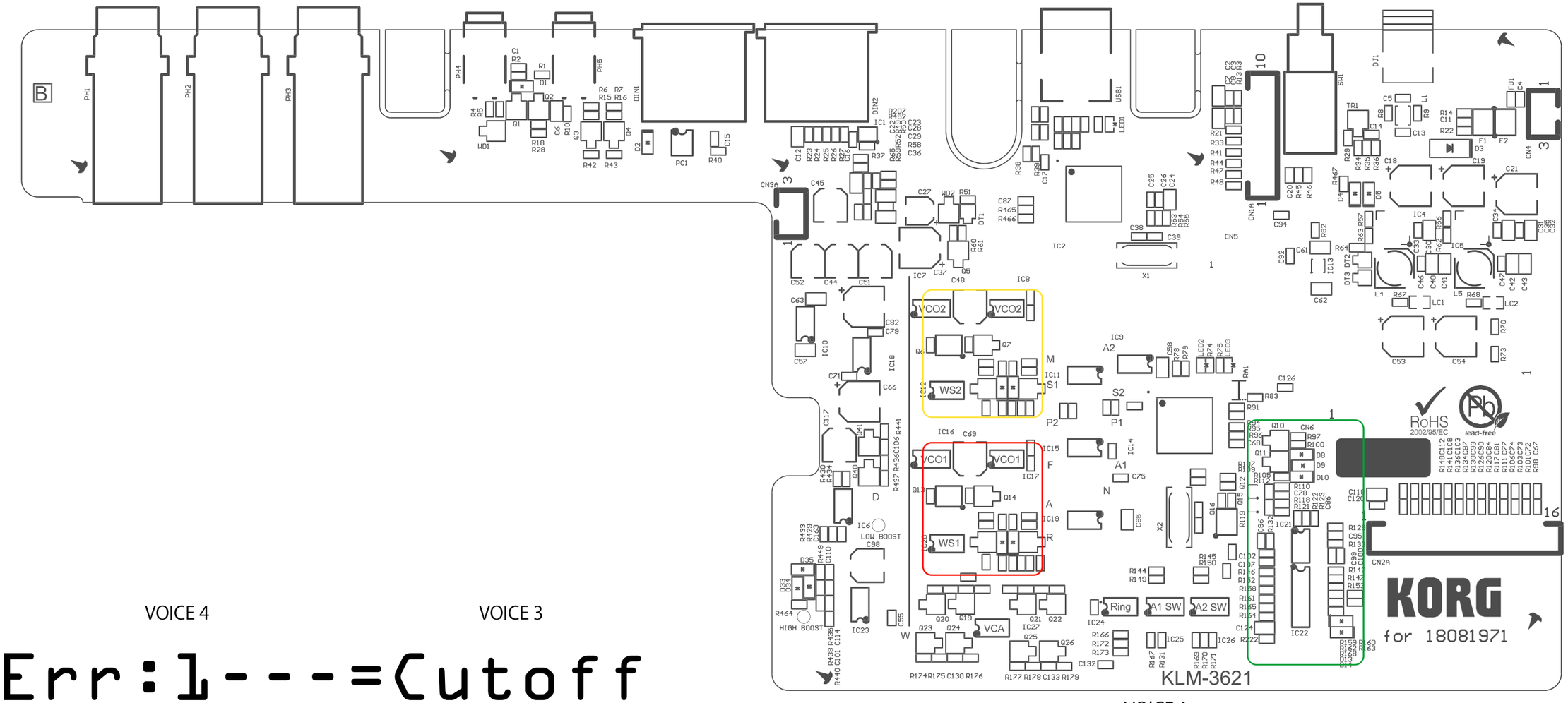

VOICE 4 VOICE 3

```
Err:1---=Cutoff
```

VOICE 1

VC01 Pt	TuningError : VCO1 Pitch
VC01 Sh	TuningError : VCO1 SHAPE
VC02 Pt	TuningError : VCO2 Pitch
VC02 Sh	TuningError : VCO2 SHAPE
Resonance	TuningError : Resonance
Cutoff	TuningError : Cutoff

Please check on the bottom side as well.

This is only a guide. There may be other causes for the error.

Y.Yamada 29th Nov 2016

KORG monologue Parts List

⚠ : SAFETY CRITICAL COMPONENT.
Assem=Assembly view item number

Code	Category	Part Name	Description	Remark	QTY -SV	-RD	-GD	-BL	-BK
510100521010	FUSE	FUSE TF16AT2.00TTD	KLM-3621	[TOP]FU1	1				
510300511035	POWER MOS FET	RRQ030P03TR	KLM-3621	[TOP]F1, F2	2				
510310511501	DIODE	1SR154-400 TE25 (PMDS) (S)	KLM-3621	[TOP]D3	1				
510312513021	Chip LED	TO-1608BC-MRE	KLM-3621	[TOP]LED1	1				
510320511003	OPAMP	NJM4580M-TE3-#ZZZB (S)	KLM-3621	[TOP]IC10	1				
510320511008	OPAMP	NJM4556AM-TE1-#ZZZB (S)	KLM-3621	[TOP]IC18	1				
510320511049	OPAMP	NJM13700M-TE1-#ZZZB(S)	KLM-3621	[TOP]IC22	1				
510320514030	RESET IC	BU4227G-TR	KLM-3621	[BOT]IC28	1				
510320516126	DC-DC Converter	TPS62112RSAR	KLM-3621	[TOP]IC4, IC5	2				
510320516175	LDO IC	TLV70033DCKR	KLM-3621	[TOP]IC13 [BOT]IC29	2				
510320519535	OPAMP	TL084CPT	KLM-3621	[TOP]IC6, IC8, IC17, IC21, IC24	5				
510330510002	PHOTO COUPLER	TLP2368(TLMIDI,E(0	KLM-3621	[TOP]PC1	1				
510335522030	CRYSTAL	RSD-04000F202000	KLM-3621	[TOP]X1, X2	2				
510374510004	SW	PS-22F03 (NON-LOCKED)	KLM-3621	[TOP]SW1	1				
510450520014	PHONE JACK	PJ-603AG-04 (D)	KLM-3621	[TOP]PH1, PH2, PH3	3				
510450520506	DIN JACK	DS-05-02(DIN5P W/OUT SW) (D)	KLM-3621	[TOP]DIN1, DIN2	2				
510450524506	PHONE JACK	LJE0371-4P	KLM-3621	[TOP]PH4, PH5	2				
510450524509	DC JACK	LD-0214	KLM-3621	[TOP]DJ1	1				
510474527501	USB CONNECTOR	QT-6301-004	KLM-3621	[TOP]USB1	1				
510320516230	OPAMP	TL064CPWR	KLM-3621	[TOP]IC11, IC12, IC15, IC19, IC20, IC23, IC27	7				
510C93523621	CIRCUIT ASS'Y BOARD	KLM-3612 ASSY(DATA) MONOLOGUE	KLM-3621		1				
510200515516	VARISTOR	AVR-M1608C120MT6AB	KLM-3622	[TOP]VZ1, VZ2, VZ3, VZ4, VZ5, VZ6, VZ7	7				
510312513021	Chip LED	TO-1608BC-MRE	KLM-3622	[TOP]LED1, LED2, LED3, LED4, LED5, LED6, LED7, LED8, LED9, LED10, LED11, LED12, LED13, LED14, LED15, LED16, LED17, LED18, LED19, LED20, LED21, LED22, LED23, LED24, LED25, LED26, LED27, LED28, LED29, LED30, LED31, LED32, LED33	33				
510313504002	EL DISPLAY	UG-2864HSWEG01	KLM-3622	[BOT]OLED1	1				
510320516175	LDO IC	TLV70033DCKR	KLM-3622	[TOP]IC1	1				
510360524044	ROTARY VR	F16K-1467A	KLM-3622	[TOP]VR1, VR2, VR3, VR4, VR5, VR6, VR7, VR8, VR9, VR10, VR11, VR12, VR13, VR14, VR15	15				
510360524045	ROTARY ENCODER	F11E-0184A	KLM-3622	[TOP]EC1	1				
510374520021	TACT SW	SKRGAQD010	KLM-3622	[TOP]SW10, SW12, SW13, SW14, SW15, SW16, SW17, SW18, SW20, SW21, SW22, SW23, SW24, SW25, SW26, SW27, SW28, SW29, SW30, SW31, SW32, SW33, SW34, SW35	24				
510374522024	TOGGLE SW	TS-23E02-AC18-NI	KLM-3622	[TOP]SW2, SW19	2				
510374522028	TOGGLE SW	TS-23E01-AC-18-NI	KLM-3622	[TOP]SW1, SW3, SW4, SW5, SW6, SW7, SW8, SW9, SW11	9				
510374524034	SLIDE VR	RA45D1F-211-15C1-B5K-0046	KLM-3622	[TOP]VR16	1				
510C93523622	CIRCUIT ASS'Y BOARD	KLM-3622/23 ASSY MONOLOGUE			1				
510476801502	HARNESS	HNS-4674 10pin			1				
510476801503	HARNESS	HNS-4677 7pin			1				
510476801504	HARNESS	HNS-4673 16pin			1				
510476801505	HARNESS	HNS-4675 3pin			1				
510476801506	HARNESS	HNS-4676 2pin			1				
510646800192		X-15230 LOWER CASE E10340	Mechanical		1				
510645800176		X-15230 BACK BOARD D30535	Mechanical		1				
510646800171		X-13290 BEND BRACKET E30756	Mechanical		1				
510640805027		X-13290 BEND SPRING C41846	Mechanical		1				
510646800193		X-15230 MOLD CHASSIS E20459	Mechanical		1				
510646800175		X-13290 WINDOW E30768	Mechanical		1				
510646800176		X-13290 LED REFRECTOR E40933	Mechanical		9/7				
510646502426		X-12500 BATTERY COVER E30288-5	Mechanical		1				
510640805031		X-15230 BATTERY SPRING(+) C41921	Mechanical		1				
510640805032		X-15230 BATTERY SPRING(-) C41922	Mechanical		1				
510640800203		BATTERY SPRING (W)VN C41729	Mechanical		5				
510640800510		X-15230 UPPER PANEL C10295-1	Mechanical		1				
510640800511		X-15230 UPPER PANEL C10295-2 BK	Mechanical						1
510640800512		X-15230 UPPER PANEL C10295-3 BL	Mechanical					1	
510640800513		X-15230 UPPER PANEL C10295-4 GD	Mechanical				1		
510640800514		X-15230 UPPER PANEL C10295-5 RD	Mechanical			1			
510646800177		X-13290 BEND KNOB E30749	Mechanical		1				
510646800179		X-13290 TEMPO KNOB E30731	Mechanical		1				
510646800180		X-13290 VOL KNOB E30730	Mechanical		15				
510500501515		X-5500 SWITCH MASK KOC-F41307	Mechanical		11				
510646502163		X-6140 PSW KNOB KOC-E40774	Mechanical		1				
510802500558		FRAME LEGS F41516	Mechanical		2				
510700503541	SCREW	X-3230 CAP SCREW KOC-C41316	Mechanical		2				
510700503712	SCREW	BT CAP NIC 2.6X6 KOC-C41928	Mechanical		12		12		
510700503713	SCREW	BT CAP 3BBC 2.6X6 KOC-C41928-2	Mechanical			12		12	12
510D93523619	CIRCUIT ASS'Y BOARD	KEYBOARD UNIT LMK-25 KLM-3619	Keyboard Parts		1				
510646502364		LMK SYNTH 12KEY ASSY H30424-1	Keyboard Parts		1				
510646502468		LMK Synth 5 Key Assy KOC-H30424-4	Keyboard Parts		1				
510646502469		LMK Synth 7 Key Assy KOC-H30424-5	Keyboard Parts		1				
510646502470		LMK Synth CC Key KOC-H30422-6	Keyboard Parts		1				
510500507108		LMK Rubber Button 12 KOC-E30630-2	Keyboard Parts		3				
510500505576		LMK-25 KB Felt KOC-F42150	Keyboard Parts		1				
510500505577		LMK-25 Upper Limit Felt KOC-F42151	Keyboard Parts		1				